Zarrin Corvane

Zarrin Corvane is an architectural crystal floor lamp created to introduce structured brilliance, refined proportion, and sculptural presence into luxury interiors. Combining a polished 24K gold-plated frame with precision-cut crystal, it delivers layered ambient illumination while functioning as a freestanding architectural statement.

HDLS Lighting Ltd
45 Albemarle Street, Mayfair
London, W1S 4JL GB
info@homedecorlightstore.com
+44 7502 590333
www.homedecorlightstore.com

SKU: HDLS#ZarrinCorvane

Technical Specification

- Architectural dimensions: Ø46 × H165 cm (18 × 65 in)
- Floor base diameter: Ø40 cm (16 in)
- Approximate weight: 16 kg (35 lbs)
- 24K gold-plated stainless steel construction
- Premium A+ Grade Lead-Free Precision-Cut Crystal
- 4 × E14 LED light sources
- Universal voltage compatibility: 90–260V (110V / 220V compatible)
- Fully dimmable with compatible bulbs
- Freestanding plug-in architectural floor lamp
- 150 cm (59 in) power cable
- Handcrafted and individually quality inspected
- Worldwide insured delivery

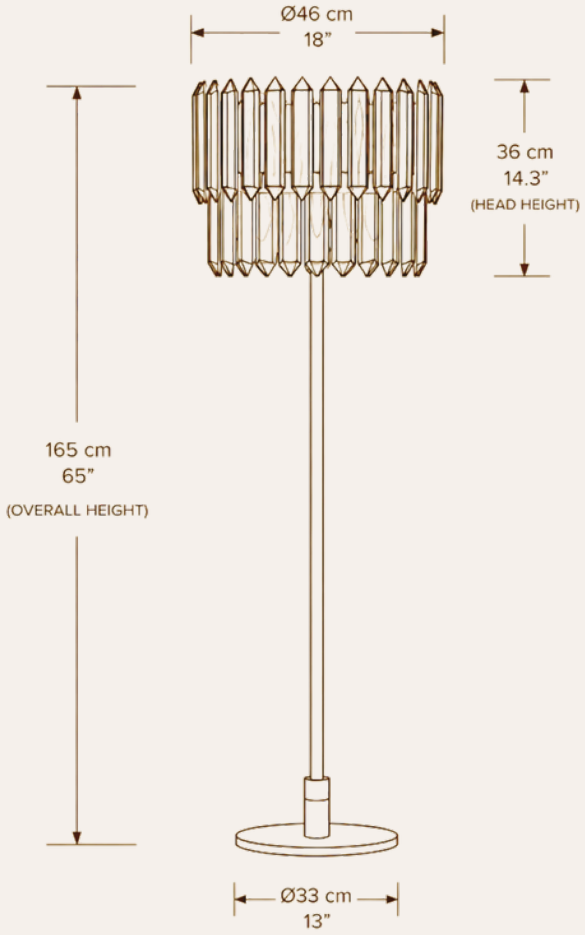

FRONT ELEVATION

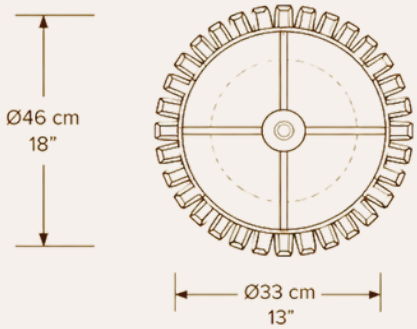

TOP ELEVATION

HDLS Lighting Ltd
45 Albemarle Street, Mayfair
London, W1S 4JL GB
info@homedecorlightstore.com
+44 7502 590333
www.homedecorlightstore.com

Certifications

- UKCA Certified
- CE Certified
- UL Certified
- CSA Certified
- RoHS Compliant
- ISO 9001 Certified Manufacturing Process (Glass & Crystal Components)

Product Features

- 24K Gold-Plated Stainless Steel Construction
- Premium A+ Grade Lead-Free Precision-Cut Crystal
- Architectural Freestanding Floor Lamp Design
- Handcrafted & Individually Quality Inspected
- Fully Dimmable with Compatible Bulbs
- Universal 90–260V Electrical Compatibility
- Plug-In Installation with Foot & Hand Switch Operation
- Ideal for Luxury Residential & Hospitality Projects
- Perfect for Reading Corners, Lounges & Dressing Rooms
- Layered Ambient Architectural Illumination
- Secure Worldwide Insured Delivery

Materials & Construction

Zarrin Corvane is handcrafted from polished 24K gold-plated stainless steel and individually arranged A+ grade lead-free crystal prisms, forming a refined architectural drum that produces controlled illumination and balanced reflections. The layered composition delivers visual depth while complementing premium materials including marble, walnut, bronze, leather, and natural stone.

HDLS Lighting Ltd
45 Albemarle Street, Mayfair
London, W1S 4JL GB
info@homedecorlightstore.com
+44 7502 590333
www.homedecorlightstore.com

Designed for luxury living rooms, executive offices, hotel suites, dressing rooms, and private lounges, Zarrin Corvane introduces disciplined architectural lighting through refined geometry and premium materials. More than a floor lamp, it functions as a sculptural lighting element that completes sophisticated interiors with warmth, balance, and enduring visual presence.

HDLS Lighting Ltd
45 Albemarle Street, Mayfair
London, W1S 4JL GB
info@homedecorlightstore.com
+44 7502 590333
www.homedecorlightstore.com